

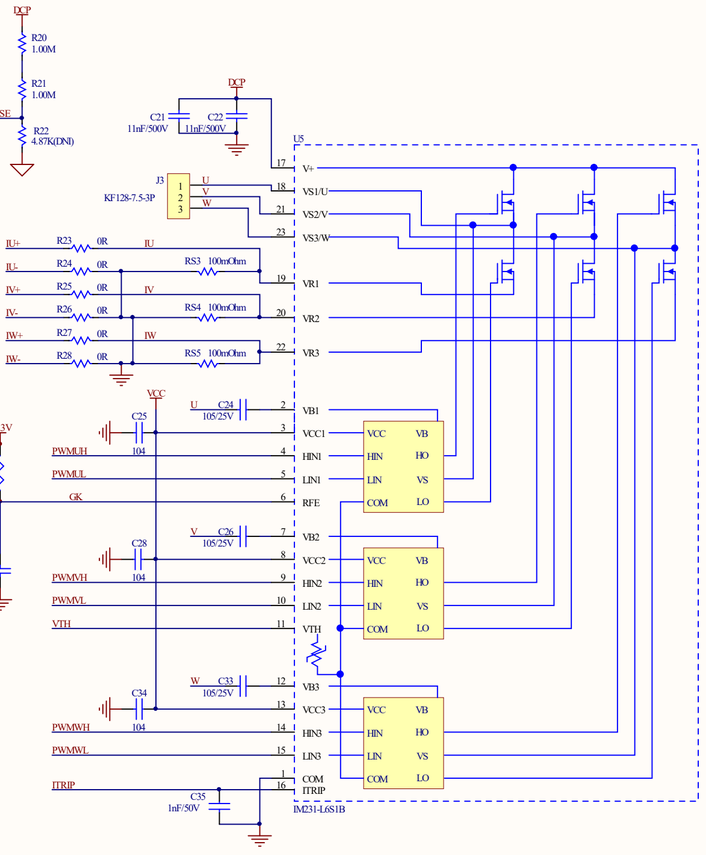

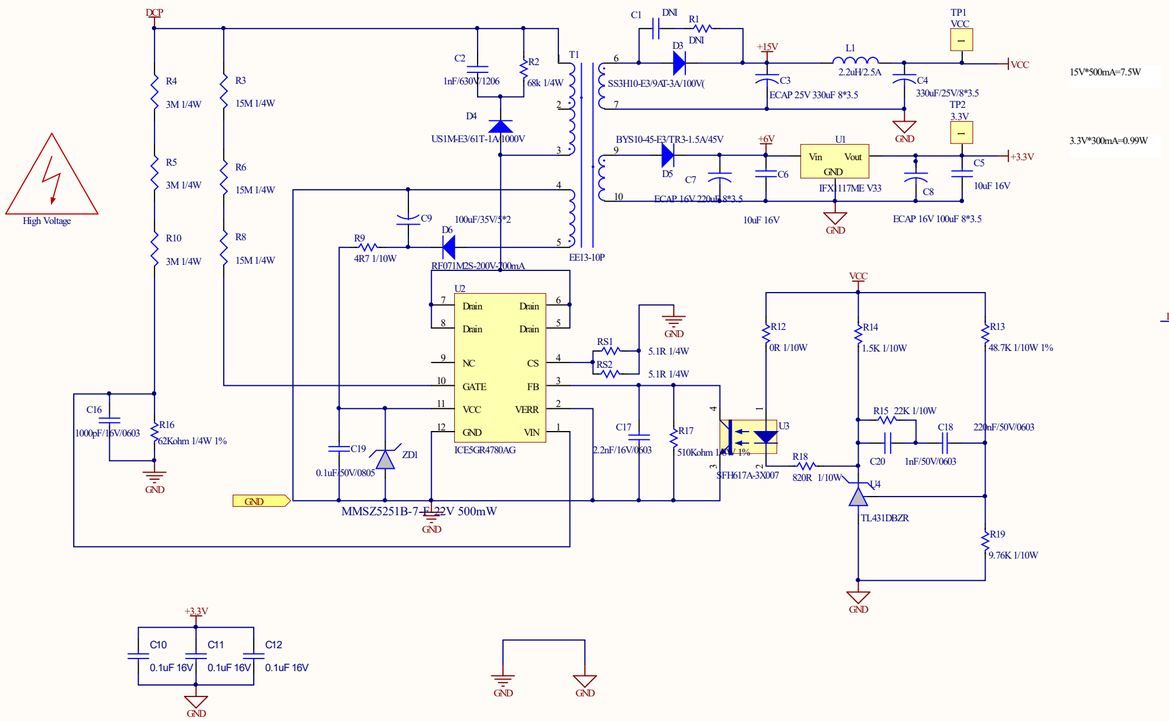

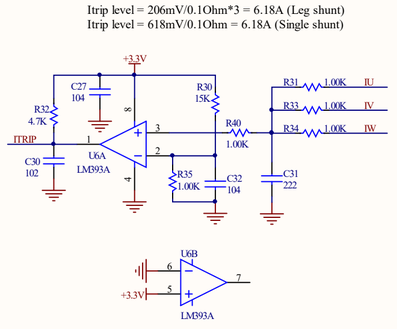

Modify to Single-Shunt current sensing:
1. Remove RS3, RS5
2. Short IU, IV, IW together

Legal Disclaimer
The information given in this document shall in no event be regarded as a guarantee of conditions or characteristics. With respect to any examples or hints given herein, any typical values stated herein and/or any information regarding the application of the device, Infineon Technologies hereby disclaims any and all warranties and liabilities of any kind, including without limitation, warranties of non-infringement of intellectual property rights of any third party.

EVAL-MI-IM231.SchDoc	
Revision: 1.0	Date: 10/9/2018
Designer: Yijiuan	Approver: *
Sheet No.: 1 / 1	Sheet Size: A2

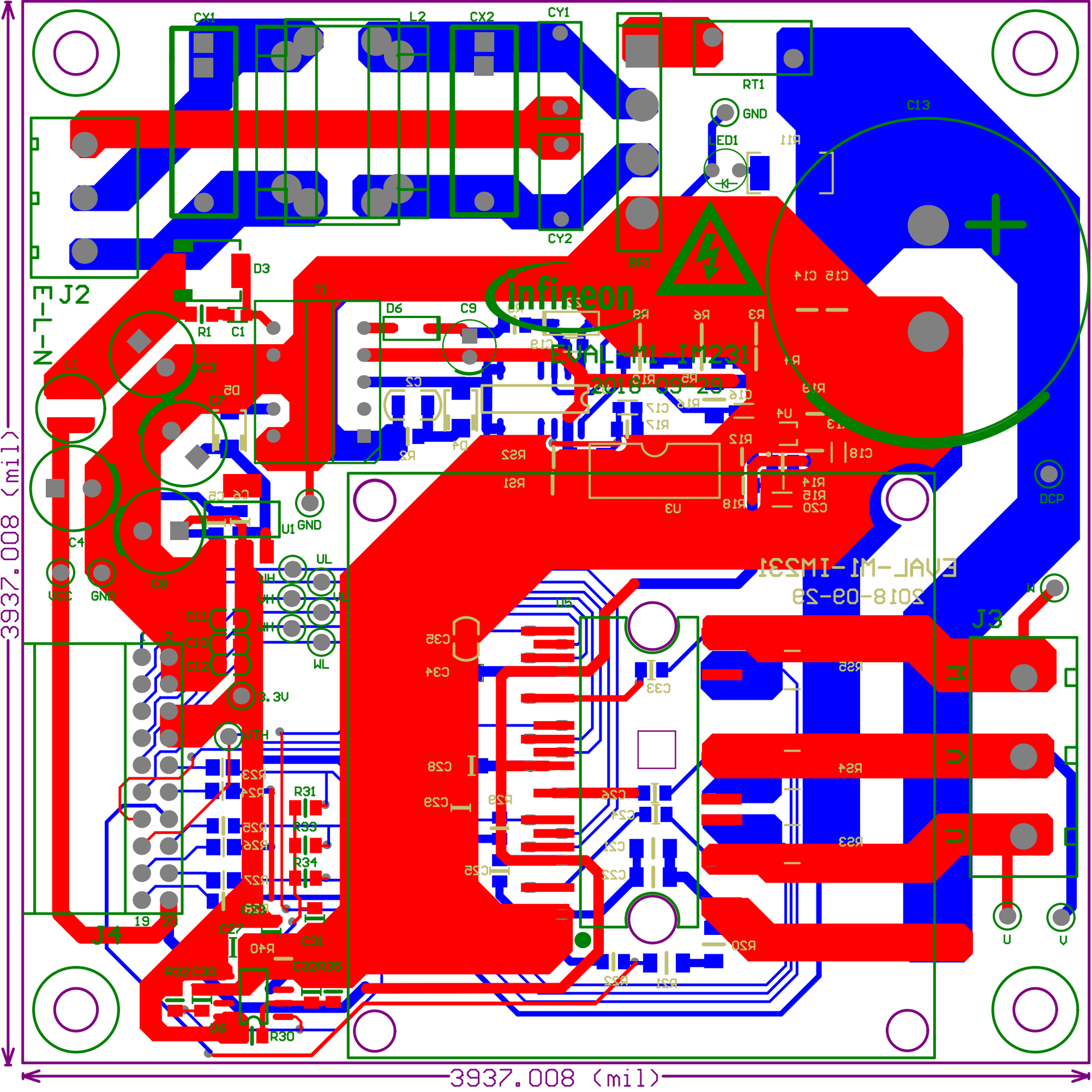

CX1
L2
CX2
CY1
CY2
RT1
GND
ED1
C13
J2
E-L-N
D3
R1
C1
T1
D6
C9
infineon
EVAL-M1-IM231
2018-09-29
L1
C3
D5
C5
C2
D4
R2
R52
R51
U3
C15 C14
C18
R14
R15
C20
R18
DCP
C6 C5
U1
GND
C4
VDC
GND
C8
UL
WL
C11
C10
C12
3.3V
VTH
R23
R24
R25
R26
R27
R28
R31
R33
R34
J4
19
C27
C31
R40
C32R35
R32 C30
U6
R30
C35
C34
C33
C28
C29
R29
C26
C24
C21
C22
C25
R20
R22
R21
R55
R54
R53
J3
U
V
3937.008 (mil)
3937.008 (mil)